MOTOR POWERED CABLE REELS

9B | EN 2022

MOTOR POWERED CABLE REELS

Contents

Motor powered cable reels 3
General 4
Calculations 5
Reel installation example 6
Determining the cable cross section 7
Type designation 9
Cable guides 11
Cable guides and guide rollers 13
Feed point funnel 14
Terminal box 15
Cable grips 16
Cable support rollers 17
Anchor shackles 17
Installation sequence 18
Reference systems 19
Questionnaire 21
Notes 22

Application

Cable reels with motor drives are used as a power supply for mobile consumers for automated winding of flexible power or control cables for the following areas:

- All forms of portal and swivel cranes
- Container bridges
- Stacking cranes
- Gantry cranes
- Construction cranes
- Loading facilities
- Magnet and grip cranes
- E-trains
- Transfer tables
- Forklifts
- Warehouses in sewage treatment plants
- Coating machines

Our cable reels comply with VDE and UVV standards.

Special uses

- Reels for installation on maritime ships or use in the tropics
- Reels used under aggressive operating conditions (e.g. acid baths, galvanizing plants)
- Reels for the distribution of measured current, signal current and high frequency transmissions
- Reels for the transfer of of optical signals (optical fibre)
- Reels for feeding liquid or gaseous media (hose reels)
- Reels for height variable tools or control boards on lifting equipment

Slip ring bodies

VAHLE slip ring bodies are available in the following versions:

- Low voltage: Voltages ranging between 230 V and 500 V
  Amperages of 10 A to 1000 A
- Medium voltage: Voltages ranging between 10 kV and 20 kV
  Amperage of 240 A

Higher voltages available upon request. The housing for the slip ring bodies are encapsulated to meet protection type IP 55 (higher protection types available upon request).

All slip ring bodies may be equipped with stand heaters (standard for medium voltages) upon request. The installation of a heater is recommended for temperatures below −25 °C or where large temperature fluctuations are expected within a short period of time.

Special slip ring bodies for profibus data transfer with 1.5 Mbit/s are also available.

Fibre optic cables are used for the transmission of all optic signals. The transmission between the rotating part (reel body) and the fixed part will then be performed using the fibre optic transmitter. This is adjusted to the length of the cable as well as the number of fibre optic cables.

A plug connector is used. The transmitter shall either be attached to the slip ring body or is located in a housing, both in a heated room.

GENERAL

Drives

We offer the following drives:

- Three-phase motor with magnetic coupling
- Three-phase motor with frequency converter
  - with constant torque
  - with adjustable torque
- Three-phase motor with integrated frequency converter
  - with constant torque
  - with adjustable torque
- Torque motor with/without external ventilator

All drives run in winding direction. The payout involves the pulling of the cable from the reel counter to the drive torque. The drive is suitable for all device speeds up to a standstill. A brake stops the uncontrolled unwinding of the cable when the device is switched off. The drive can be electrically heated upon request.

Reel bodies

- Mono spiral winding bodies with spokes are available in welded and bolted versions. The bolted design can be set to the winding width and thus adjusted to different cable cross sections. The winding cross section is adjusted to the minimum bend radius for the cable.
- Cylindrical (random) winding reel bodies are made of galvanized steel.

Also available:

- Double spiral winding reel bodies for the parallel winding of two cables with the same cross section
- 3-2-3 layered winding
- Cylindrical winding with spooling equipment

Payout

The cable payout is as presented in the dimensional drawings. Payout direction changes can be made upon request without additional charges and at a later time with no great effort.

Limit switch

In order to switch off the drive or hoist motors when unwinding the last or next-to-last cable winding, all reels come with an optional limit switch. The switching cams are set for a maximum of 5 A and 250 V. The limit switch is located either in the slip ring body housing or externally in its own housing (with a Nirosta chain as a drive). Alternatively other limit switches, proximity switches or feeds can be installed.

Surface protection

The reel body comes standard in a galvanized version. The slip ring body housing and the drive unit have a primer and cover coating in RAL 7040. Other versions (e. g. hot-dip galvanized or stainless steel reel bodies) are available.

Operating manual

Instructions for assembly and commissioning are included in every delivery.

Assembly

When attaching the motor-powered cable reel to the consumer, make sure that the assembly frames or the foot-mounted gears have a level surface. In order to guarantee the smooth winding up and down the reel needs to be aligned on two sides, i. e. the reel axis needs to be horizontal and perpendicular to the running direction.

The heat emission from the motor drive needs to flow upwards and may not be hindered by protective hoods or other devices. The cables need to be free from twisting – while accounting for the safety winding(s) for the strain relief – on the reel body. Expert staff shall install the electrical connections to the slip rings and the feed points in compliance with regulations.
After successful connection of the drive motor, the reel is ready for operation. The drive motor needs to be connected so that the reel rotates in the wind up direction. The payout direction is marked with an arrow.

Accident prevention measures

In accordance with EC directive 2006/42/EC, we wish to indicate that rotating parts such as reels need to be secured to prevent potential accidents.

Warranty

We provide guarantees in compliance with the general terms and conditions for products and services of the electrical industry.

Accessories (from page 11)

- Guide rollers with and without tension control
- Sheave guides with and without top guide rollers
- Deflection and guide rollers
- Feed point
- Medium voltage terminal box
  (special versions available, e. g. with fibre optic cable)
- Cable grips
- Cable support rollers and anchor shackles

CALCULATIONS

Calculating the necessary cable cross section

1. Determination of ampacity and cable cross section
2. Control of voltage drop
3. Selection of cables

1. Determination of ampacity and cable cross section

The nominal current (I_N) of the individual motors are summarized with a reduction factor (f_{ED}, f_T, f_1, f_2) to an equivalent continuous current (I_D). The following calculation shall also be performed repeatedly if necessary.

$$I_D = \frac{I_N}{f_{ED} \cdot f_r \cdot f_1 \cdot f_2} \quad [A]$$

I_N: Recommendations for determining the nominal current

Estimated example for crane installations: Sum up of the nominal currents for two motors with the strongest output.

$$I_N = I_{N1} + I_{N2} + I_G \quad [A]$$

If only one power output is known:

$$I_D = \frac{P \cdot 1000}{\sqrt{3} \cdot U \cdot (\cos\varphi \cdot \eta)} \cdot f_G \quad [A]$$

2. Check of voltage drop

Rough calculation for determining the voltage drop ΔU:

$$\Delta U = \sqrt{3} \cdot L \cdot I_A \left(\frac{Z}{1000}\right) \quad [V]$$

I_A: Calculation of start-up current

The order of the motors size does not depend on their power output but on the level of start-up current i. e.: squirrel cage motor with less power output but high start-up current is placed ahead of a slip ring motor with higher performance.

Recommendation:

$$I_A = I_{A1} + I_{N2} \quad [A]$$

I_{A1}: 1. motor with highest start-up current
I_{N2}: 2. motor with highest nominal current

Note:

$$I_A = X + I_N \quad [A]$$

Squirrel cage motors:	$X \approx 6$
Slip ring motors:	$X \approx 2$
Frequency regulated drives:	$X \approx 1.1$

3. Selection of cables

Reel-capable cables in accordance with DIN/VDE 0298 shall be used. In doing so the smallest permissible bending radius (page 8) needs to be taken into account.

For reasons of mechanical strength, the diameter of control cables should not be less than 1.5mm². We recommend to include spare conductors for multicore control cables.

Legend to formula

P	= Power [kW]
U	= Voltage [V]
L	= Total cable lenght [m]
Z	= Effective impedance [Ω/km]
ΔU	= Recommended ΔU <3 %
cos φ	= 0.6 from table 1 (page 7)
cos φ · η	= 0.8 estimated
f_G	= 1.0 when individual power rating is known
f_G	= 0.9 only total power is known
f_{ED}	= Reduction factors for intermittent service (page 7)

f_T = Reduction factor for increased ambient temperature. For ambient temperatures above 30 °C, the reduction factors on page 7 shall apply.

f_1 = Reduction factor for multi-layer winding for ampacities based on the type of reel as per page 7. They are valid for permanently wound up cables. For cables that are only temporarily fully wound, reduced factors can be applied.

f_2 = Reduction factor for multilayer coiling. The factors on page 7 should be taken into account for multilayer cables. They apply for diameters of up to 10 mm²

I_A = Starting current [A]

REEL INSTALLATION EXAMPLES

Reel on moving equipment

Cable tray on the ground or on a continuous tray

Cable payout horizontally in one or two directions

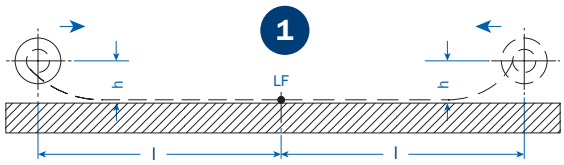

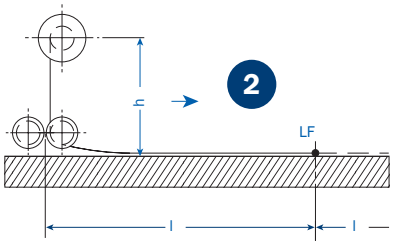

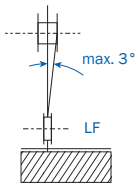

Reel on moving equipment

Cable storage on supports (l1 = 1 m), or on rolls or round smooth supports (l1 = 1 to 3 m)

Horizontal cable payout in one or two directions

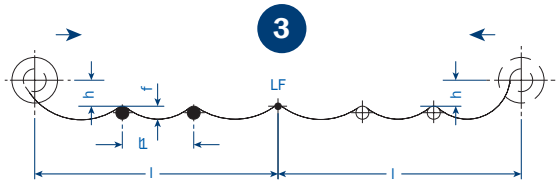

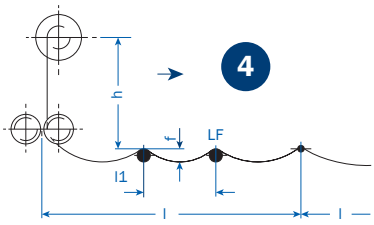

Reel stationary

(Cable fixpoint at moving equipment), horizontal cable payout in one or two directions on rolls or smooth supports (l1 = 3 m)

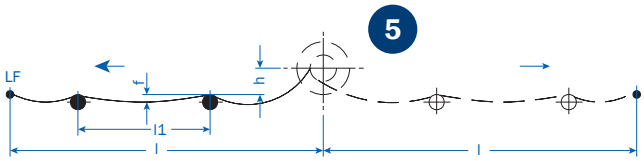

Reel on moving equipment (6) Or reel stationary (7) (cable fix point at moving equipment)

Free horinzontal cable payout in one or two directions. For payout in one travel direction: „f“ is determining the loop depth if the suspended cable length „L“ is larger than „l“.

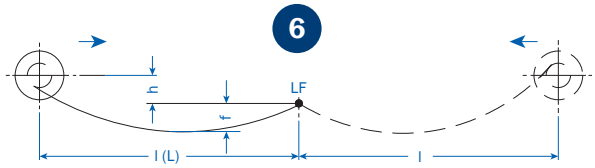

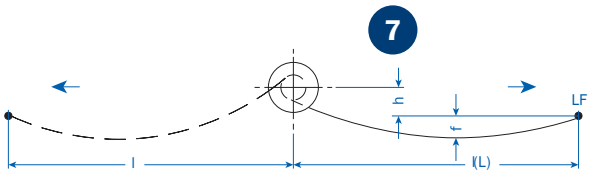

Legend to drawings (examples 1–7)

l = max. operational length of cable (m)
(with cable payout in two travel directions = half travel length)

L = max. operational length [m] between reel and cable fixpoint

h = Installation height = distance from cable tray or cable fixpoint to reel center [m]

LF = Cable fixpoint

f = max. cable loop depth [m], relating to cable fixpoint “LF”

l1 = Rolls or support distance [m]

Note

For applications 2, 4, 5 and reels beyond the listed capacities please fill in the questionaire on page 21 and consult your local agent or our factory.

Legend to drawings (examples 8 and 9)

l = operational length of cable

L = max. sloping cable length (m). Also consider additional weight (e. g. control switch)

LF = Cable fixpoint

Lifting operation

Cable payout vertical or steeply sloping (8)

Cable payout vertical or steeply rising (9)

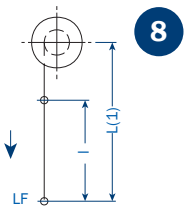

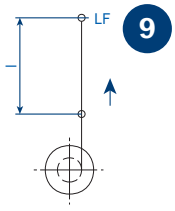

1) The sloping cable lenght is relevant for cable reel selection. Also consider additional weight (control switch).

DETERMINING THE CABLE CROSS SECTION

Table 1: Continuous ampacity of cables NSH ... and NTS ... for straight, open air installation. Max. possible operating temperature of the condurctor 90 °C.

Nominal cross section [mm²]	Ambient temperature 30 °C Continuous amp. [A]	Factors for intermittent duty with ED				Z [Ω/km]
		60 %	40 %	25 %	15 %	
1.5	23	1.00	1.00	1.00	1.00	8.770
2.5	30	1.00	1.00	1.04	1.07	5.310
4	41	1.00	1.03	1.05	1.19	3.360
6	53	1.00	1.04	1.13	1.27	2.250
10	74	1.03	1.09	1.21	1.44	1.370
16	99	1.07	1.16	1.34	1.62	0.888
25	131	1.10	1.23	1.46	1.79	0.547
35	162	1.13	1.28	1.53	1.90	0.443
50	202	1.16	1.34	1.62	2.03	0.344
70	250	1.18	1.38	1.69	2.13	0.258
95	301	1.20	1.42	1.74	2.21	0.205
120	352	1.21	1.44	1.78	2.26	0.174
150	404	1.22	1.46	1.81	2.30	0.154
185	461	1.23	1.48	1.82	2.32	0.136
240	540	1.23	1.49	1.85	2.36	0.119

Table 2: Multiplier for ambient temperature

Ambient temperature [°C]	25	30	35	40	45	50	55	60	65	70
Reduction factor f_r	1.05	1.00	0.95	0.89	0.84	0.77	0.71	0.63	0.55	0.45

Table 3: Multiplier for multilayer coiling

Number of complete layers LZ on the reel	1[1]	2	3	4
Reduction factor f_1	0.80	0.61	0.49	0.42

Table 4: Multiplier for multilayer coiling up to 10 mm²

Number of conductors	5	7	10	14	19	24	40	61
Reduction factor f_2	0.75	0.65	0.55	0.50	0.45	0.40	0.35	0.30

1) Also applies to spiral coils

Table 5: Minimum bending radius

Cable type	Nominal voltages of up to 0.6/1 kV			Nominal voltage of over 0.6/1 kV	Comment
Flexible cables	Cross section of cables or thickness of the flat cables				If cable types can be used for several applications contact the manufacturer.[2]
	over 8 to 12	over 12 to 20	over 20		
Fixed installation	3 x d	4 x d	4 x d	6 x d	
Free movement	4 x d	5 x d	5 x d	10 x d	
For entry	4 x d	5 x d	5 x d	10 x d	
For positive guidance[1]	5 x d	5 x d	6 x d	12 x d	
Guide roller	7.5 x d	7.5 x d	7.5 x d	15 x d	

The smallest permissible bending radius is 6 x d for PUR-HF cables 0.6/1 kV with positive guidance like reel operation.

The straight lengths between two bends with an S-shaped cable guide or cable guide to another level must be at least 20 times the cable diameter.

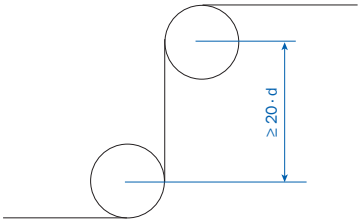

Subject to technical advancement.

1) with reeling operation
2) The suitability for this operating mode needs to be assured through special structural characteristics.

TYPE DESIGNATION

Motor cable reels
with magnetic coupling drive

LTM	300	S	7	M	36	–	R1	/	1.8
LTM	530	N	4	M	60	–	95	/	5
LTM	15/40	H	4	K	240	–	128	/	88

Cable reels with magnetic coupling drive

Random winding (inner diameter of the reel in millimetres)

Spiral winding (inner diameter/exterior diameter in decimetres)

S = Low voltage with vertical payout
N = Low voltage with horizontal payout
H = Medium voltage

Number of poles for slip ring body

M = Brass slip ring
K = Copper slip ring

Slip ring rating in amps (100 % ED)

Gear sizes: Bevel – helical gear unit 1 = R1
Flat spur gear = 95 + 96
Bevel – helical gear unit = 48 – 168

Magnetic coupling sizes

TYPE DESIGNATION

Motor cable reels
with frequency converter drive

LT	420	S	24	M	36	–	68	/	FMK	4	G
LT	530	N	4	M	60	–	88	/	FK	4	J
LT	15/40	H	4	K	240	–	128	/	FP	6	M -S

Cable reels with frequency converter drive

Random winding (inner diameter of the reel in millimetres)

Spiral winding (inner diameter/exterior diameter in decimetres)

S = Low voltage with vertical payout
N = Low voltage with horizontal payout
H = Medium voltage

Number of poles for slip ring body

M = Brass slip ring
K = Copper slip ring

Slip ring rating in ampere (100 % ED)

Gear sizes

FMK = Frequency converter with constant torque installed directly to the motor (always from Getriebebau Nord)
FMP = Frequency converter with variable torque installed directly to the motor (always from Getriebebau Nord)
FK = Frequency converter with constant torque
FP = Frequency converter with variable torque

Number of poles of the motor

Motor size

S = Frequency converter from Siemens Sinamics
No label = from Getriebebau Nord

CABLE GUIDES

Guide roller assemblies

for monospiral wrap

For voltages up to 1000 volt and payout in two directions

For voltages exceeding 1000 volt: r min. = 15 x cable cross section

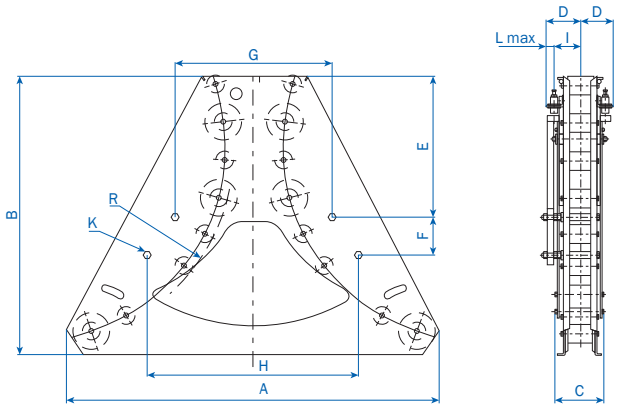

Guide roller without pendulum

Type	≈kg	A	B	C	D	E	F	G	H	K	R	max. LTG Ø	Order No.
R 6	85	1140	860	145	95	360	125	430	598	M 16	600	55	924994
R 9	150	1595	1200	180	130	606	164	670	900	M 20	900	75	924995
R 12	250	2100	1660	210	130	560	500	740	1200	M 20	1200	83	924996

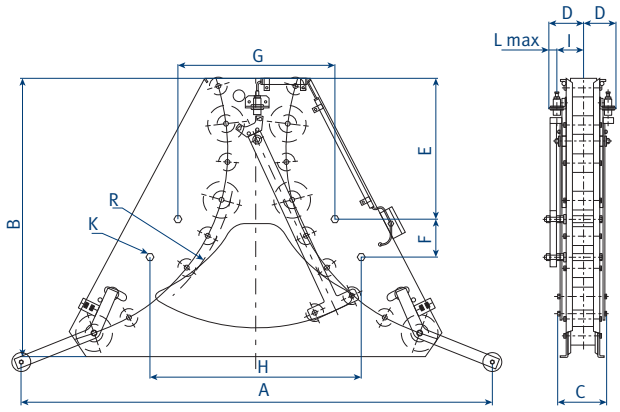

Guide roller with tension control

Type	≈kg	A	B	C	D	E	F	G	H	I	K	R	max. LTG Ø	Order No. with position switch	Order No. without position switch
RZ 6	95	1700	930	185	123	360	125	430	598	92.5	M 16	600	55	926576	924742
RZ 9	160	2175	1240	220	140	606	164	670	900	111	M 20	900	75/60[1]	925073	925002
RZ 12	260	2600	1710	220	140	560	500	740	1200	111	M 20	1200	83/80[1]	926573	925003

1) For voltages exceeding 1000 V

SHEAVE GUIDE

Sheave guide SU

The SU sheave guide is used for spiral winding reels. It serves to deflect the cable of the cable reel located above and to bypass the feed point.

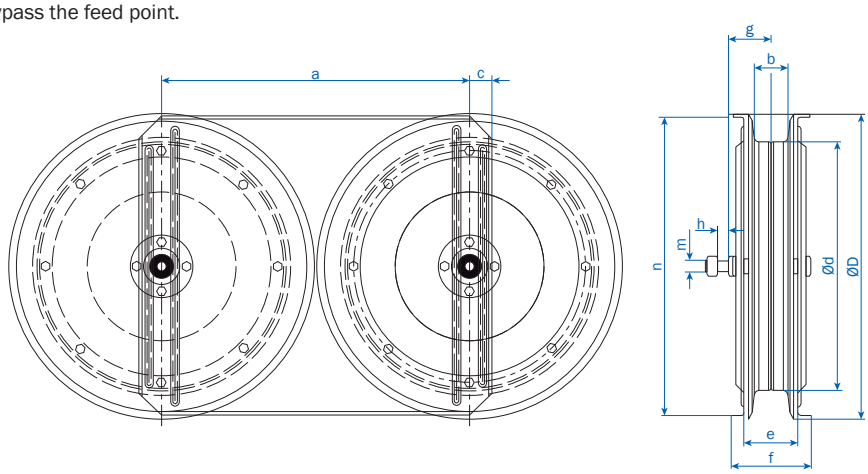

Type	Weight kg	a	b	c	Ø d	Ø D	e	f	g	h	m	n	o	p	max. LTG Ø	Order No.
SU 1	48	455	70	32.5	350	450	114	170	85	50	M 24	445	180	315	22	901635
SU 2	76	655	70	47.5	503	650	114	170	85	50	M 24	640	180	400	32	901636
SU 3	90	785	70	80	663	780	114	170	85	50	M 24	770	180	500	39	901637
SU 4	120	905	75	80	783	900	114	170	85	50	M 24	890	180	600	50	901638

Sheave guide SU-R

The SU-R sheave guide with additional top guide roller is used in cross rollers for cylindrical winding reels. It serves to deflect the cable of the cable reel located above and to bypass the feedpoint funnel. The installation height of the drum to the guide needs to provide for a maximum diagonal pull of 3° to allows a smooth winding of the cables.

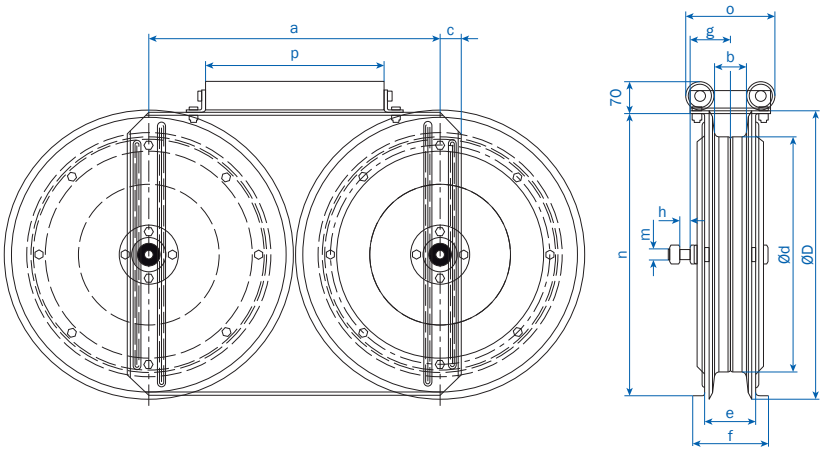

Type	Weight kg	a	b	c	Ø d	Ø D	e	f	g	h	m	n	o	p	max. LTG Ø	Order No.
SU-R 1	53	455	70	32.5	350	450	114	170	85	50	M 24	445	180	315	22	901630
SU-R 2	84	655	70	47.5	503	650	114	170	85	50	M 24	640	180	400	32	901631
SU-R 3	105	785	70	80	663	780	114	170	85	50	M 24	770	180	500	39	901632
SU-R 4	140	905	75	80	783	900	114	170	85	50	M 24	890	180	600	50	901633

DEFLECTION AND GUIDING ROLLERS

Deflection and guide rollers are used if the cable payout cannot be made directly from the reel. The roller cross section needs to be at least 15 times the cable cross section.

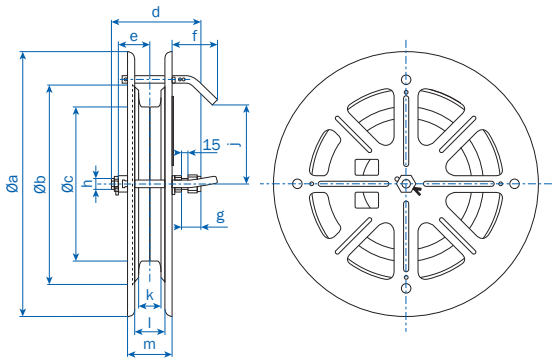

URN series

Type	Weight kg	Øa	Øb	Øc	d	e	f	g	h	j	k	l	m	Order No.
VURN 350	23	600	450	350	195	60	99	42	M 20	180	50	58	98	970421
VURN 500	42	800	650	530	240	84	85	57	M30	280	50	82	112	970422
VURN 660	52	900	780	660	240	86	75	55	M30	344	70	90	120	970423

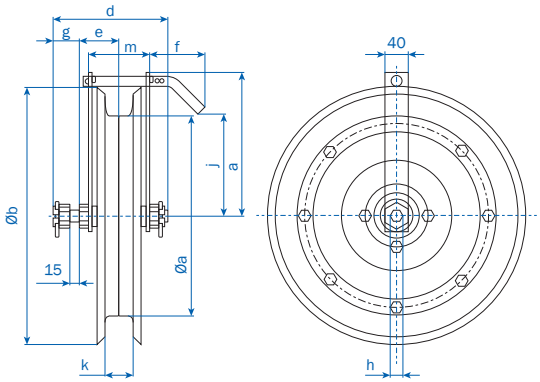

LRN series

Type	Weight kg	Øa	Øb	Øc	d	e	f	g	h	j	k	l	m	Order No.
LRN 350	16	253	450	350	183	70	97	45	M 24	180	45	-	105	970424
LRN 500	24	360	650	530	240	82	88	59	M 30	280	50	-	116	970425

FEED POINT FUNNEL

For voltages up to 1000 volt and cable payout in two directions for medium travel speed and frequent traveling of midpoint.

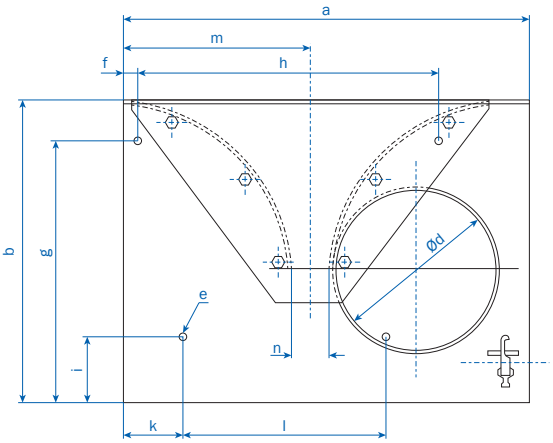

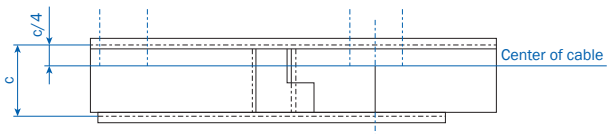

Type	Weight kg	a	b	c	d/r	e	f	g	h	i	k	l	m	n	max. LTG.Ø	Order No.
ETZ 3	15	650	530	106	275	14	40	405	400	220	120	300	270	60	34	921380
ETZ 4	28	900	700	146	400	18	40	550	740	220	210	400	410	80	50	921390
ETZ 5	52	1220	900	208	500	18	40	780	900	220	180	600	480	100	62	921400
ETZ 7	100	1760	1200	208	700	18	200	1080	1100	220	350	800	750	100	80 ~60(1)	921410
ETZ 9	130	2070	1475	216	900	22	125	1325	1820	275	1250	695	960	120	90 ~70(1)	921720

1) for voltages exceeding 1000 V

TERMINAL BOX

Terminal box 10 kV

Protection type IP 54

Stainless steel housing

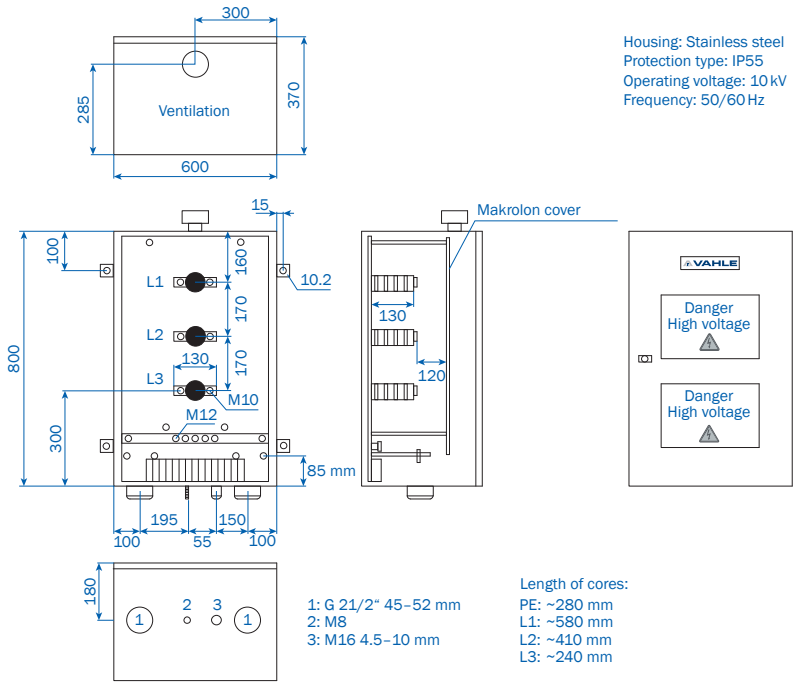

Type	Weight kg	Order No.
KKU-10K-XXXX-UU-E-0000-P55-G683-0755320	50	970579

Terminal box 20 kV

Protection type IP 54

Stainless steel housing

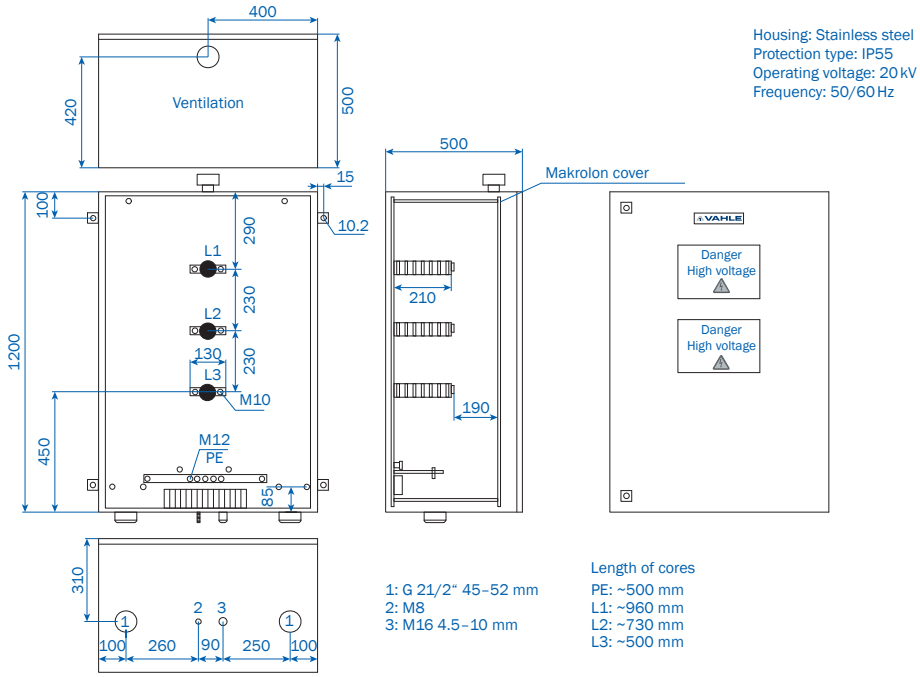

Type	Weight kg	Order No.
KKU-20K-XXXX-UU-E-0000-P55-G8X3-0755330	75	970580

CABLE GRIPS

with 2 gromments, open on the eye side, sleeve end without soldering point

Type	Maximum permitted strain kg	for Cable cross section	Order No.
VLZ 1	930	15–20	901620
VLZ 2	1165	20–30	901621
VLZ 3	1400	30–40	901622
VLZ 4	1630	40–50	901923

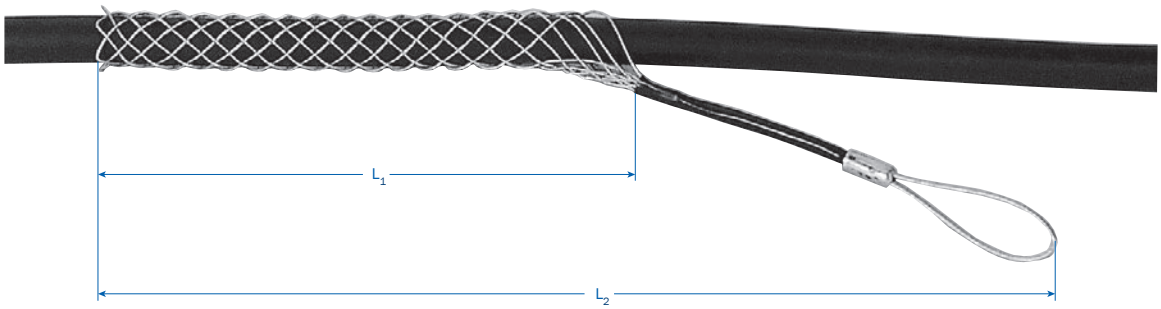

Type	Max. permitted strain[1] kg	For cable cross section	Length of wire mesh measure L_2	Mesh length dimension L_1	Order No.
VLZK 6	60	4 to 7	100	275	900391
VLZK 9	110	7 to 9	120	290	900392
VLZK 12	130	9 to 12	135	340	900393
VLZK 15	210	12 to 15	180	390	900394
VLZK 20	260	15 to 20	220	450	900395
VLZK 25	260	20 to 25	275	510	900396
VLZK 30	400	25 to 30	350	610	900397
VLZK 40	580	30 to 40	370	660	900398

1) Calculated for triple security

CABLE SUPPORT ROLLERS

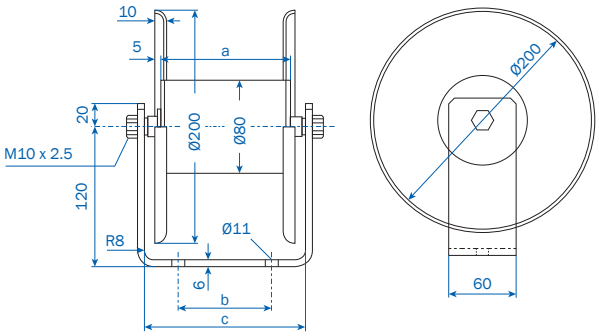

Type	Weight kg	Support	a	b	c	Order No.
TR 80/110 B 200	2.25	without support	110	-	130	924450
TR 80/300 B 200	3.25		300	-	320	924460
TR 80/500 B 200	4.50		500	-	520	924470
TR 80/110 B 200 H	3.50	with support	110	80	130	924480
TR 80/300 B 200 H	5.15		300	250	320	924490
TR 80/500 B 200 H	6.90		500	400	520	924500

TURNOVER ANCHOR CLAMP

For voltages of up to 1000 volt, for cable cable payout in 1 or 2 directions, for low speeds.

Application

Mainly used in connection with plug and socket service or when a vertical seeding connection from underneath the cable tray is impossible.

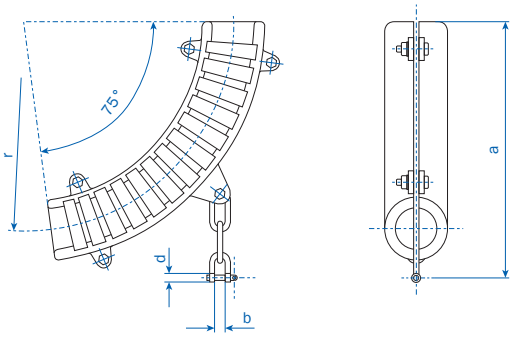

Type	Weight kg	Cable Ø	r	a	d	b	Order No.
LS 1	1.6	–21.5	100	205	10	14	921420
LS 2	2.5	>21.5–28.0	130	225	10	14	921430
LS 3	3.5	>28.0–36.5	170	265	12	17	921440
LS 4	5.5	>36.5–48.0	220	300	12	17	921450

INSTALLATION SEQUENCE

Cable reel with guide roller and feedpoint funnel

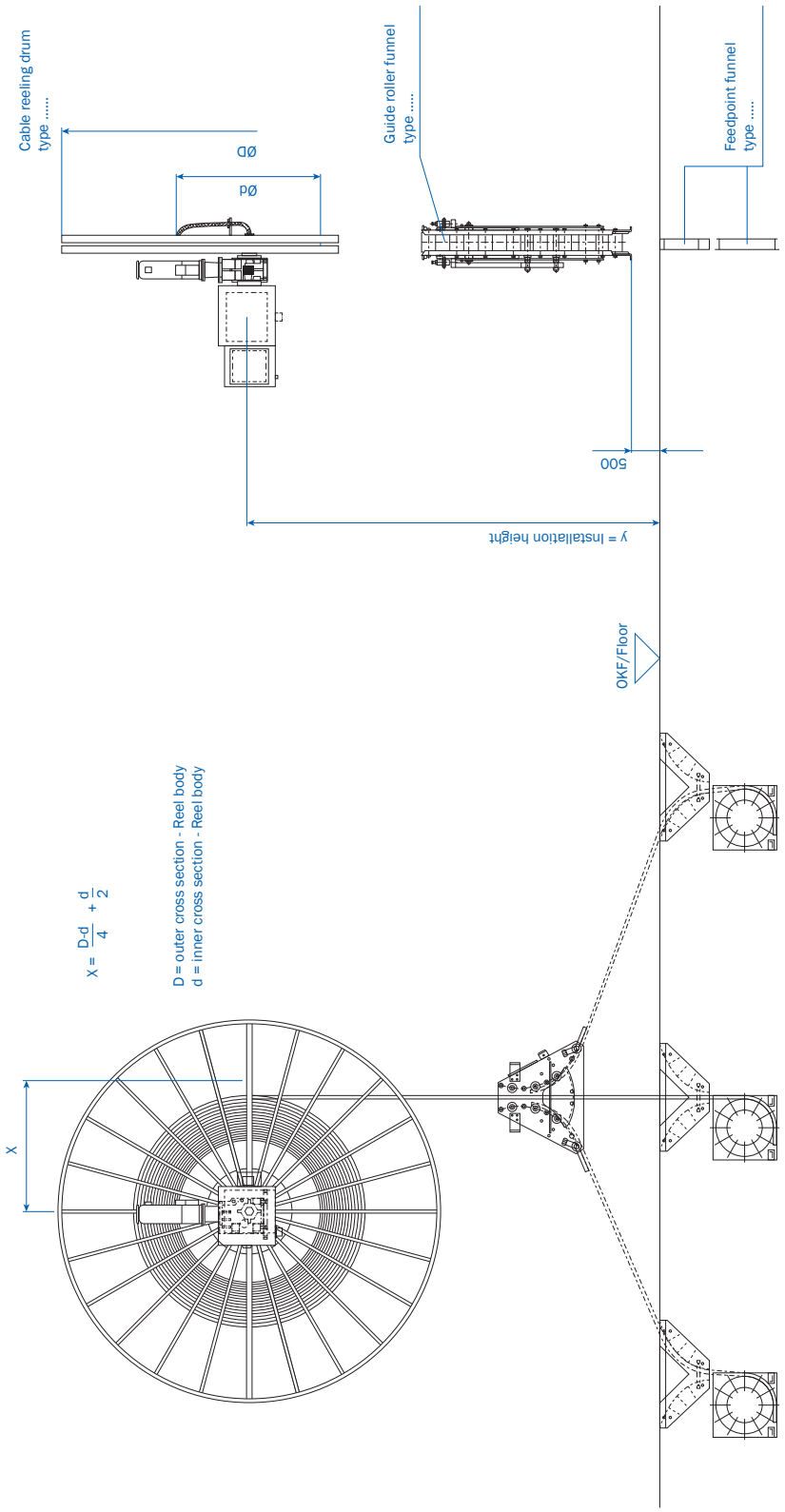

REFERENCE SYSTEMS

Container crane at Bremerhaven international harbour

Frequency regulated drive with strain regulation including control.
Slip ring body 10 kV with 12 channel LWL-rotation transmission.

Reel bodies:	7.4 m
Winding lengths:	500 m
Cable:	NTSCGEWÖU
	6 kV, 3 x 95 + 2 x 50/3 + 18 LWL
Operating speed:	55 m/min.
Installation height:	20 m

In use since 2002.

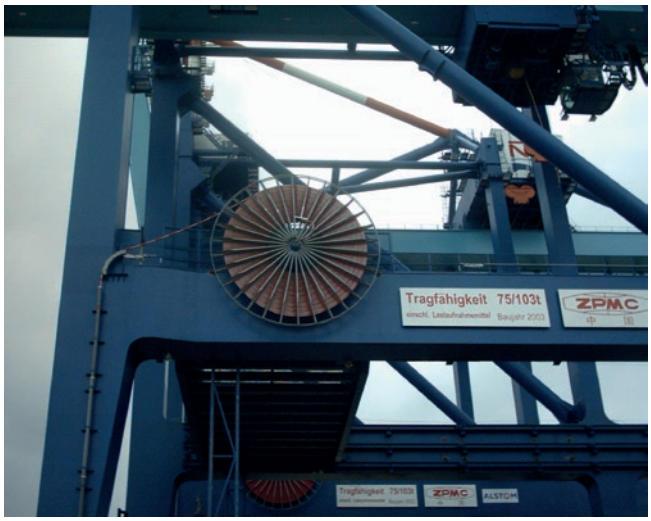

Container crane at Duisburg Rhine Harbour

Frequency regulated drive with strain regulation including control.
Slip ring body 10 kV with 6 channel LWL-rotation transmission.

Reel bodies:	5.3 m
Winding length:	500 m
Cable:	NTSCGEWÖU
	10 kV, 3 x 3.5 + 2 x 25/2 + 6 LWL
Operating speed:	120 m/min.
Installation height:	6 m

In use since 2004.

REFERENCE SYSTEMS

Container crane in Hamburg harbour

Frequency regulated drive with strain regulation including control.
Slip ring body 10 kV with 18 channel LWL-rotation transmission.

Reel bodies:	7.2 m
Winding length:	650 m
Cable:	NTSCGEWÖU
	10 kV, 3 x 50 + 2 x 25/2 + 18 LWL
Operating speed:	45 m/min.
Installation height:	22 m

In use since 2004.

Container crane in Mediterranean harbour Ashod/ Israel

Frequency regulated drive with strain regulation including control.
Slip ring body 10 kV with 6 channel LWL-rotation transmission.

Reel bodies:	6.4 m
Winding width:	adjustable
Winding length:	400 m
Cable:	NTSCGEWÖU
	6 kV, 3 x 70 + 2 x 25/+6 LWL
Operating speed:	45 m/min.
Installation height:	18.5 m

In use since 2004.

QUESTIONNAIRE

Company _____ Date: _____

Phone: _____ Fax: _____

Email: _____ Website: _____

1. For what type of moving equipment is the reel? _____

   (Dimensional drawings of equipment and application are extremely valuable)

   1.1. Installation site ☐ indoor _____ ☐ outdoor

   1.2. Temperature conditions −_____ °C _____ +_____ °C

   1.3. Duty factor (time on) of full operating load _____ % ED

   1.4. Environmental conditions _____

2. Type of application (see page 6) Example _____

3. Reel type ☐ random wrap ☐ monospiral wrap

4. Mounting height from center of reel to cable pickup surface _____ m

5. Working travel of equipment in motion _____ m

6. Cable payout ☐ one-way ☐ two-way

7. Operational length of active cable l= _____ m

   (Midway feed-point cuts the length of cable needed in half)

   7.1. For vertical lift (example 8) l=_____ m L= _____ m

   7.2. Loads in addition to cable weight (pendant controls or receptacles) _____ kg

8. Choosen Cable (Number of copper conductors x wire size) _____ mm^2

   8.1. Weight of cable _____ kg/m

   8.2. Diameter of cable _____ mm

9. Full operating load or maximum horsepower of equipment _____ kW

   9.1. Nom. amperage (nominal current – I_N) _____ A

   9.2. Start-up amperage (start-up current – I_A) $I_A \approx$ x $I_N \approx$ _____ A

   9.3. Voltage rating / frequency _____ V _____ _____ Hz

10. What percentage of the total installed ampacity will work simultaneously _____ %

11. Number of phase collector rings required

    (Our cable reel slipring assemblies always include one non-insulated ground) _____ pcs.

12. How many cycles of the equipment per hour? _____ cycles

13. Operating hours per day _____ hours

14. Speed of travel or lift _____ m/min

15. Acceleration _____ m/sec^2

16. Details for reel drive motor

    16.1. Voltage / frequency _____ V _____ Hz

    16.2. Duty cycle _____ % ED

17. Limit switch for travel or lift required ☐ yes ☐ no

Remarks: _____

_____

_____

_____

_____

NOTES

NOTES

Paul Vahle GmbH & Co. KG
Westicker Str. 52
59174 Kamen
Germany

+49 2307 7040
info@vahle.com
vahle.com

You can find your local contact at:
vahle.com/contact

W1100131/00/en | Rev. 03 | 03/24 | Errors and technical modifications subject to change.